REV.NO.	REVISION DESCRIPTION	DATE	APPROVED
A			

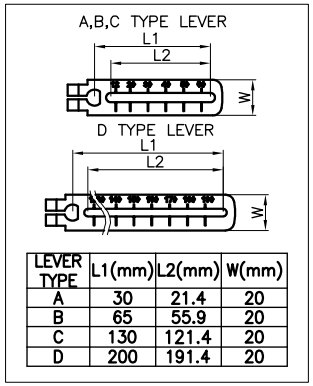

LEVER TYPE	L1(mm)	L2(mm)	W(mm)
A	30	21.4	20
B	65	55.9	20
C	130	121.4	20
D	200	191.4	20

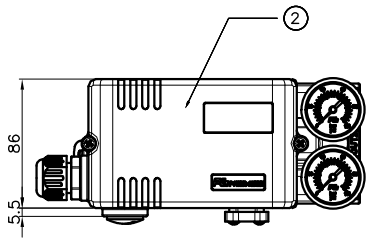

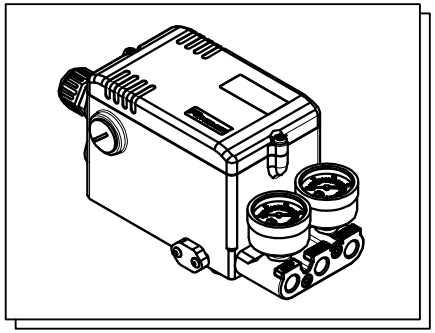

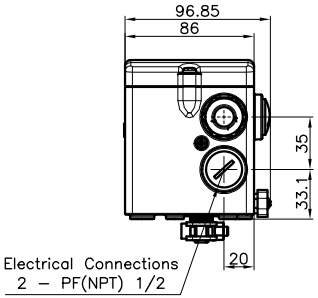

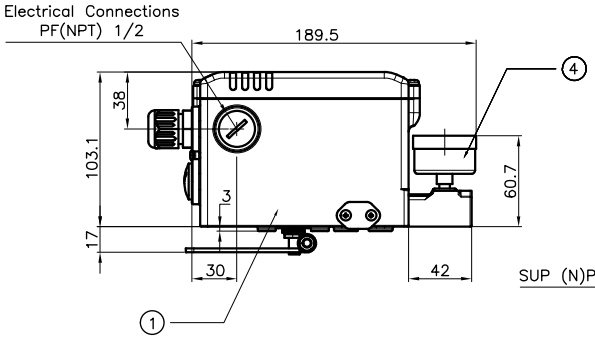

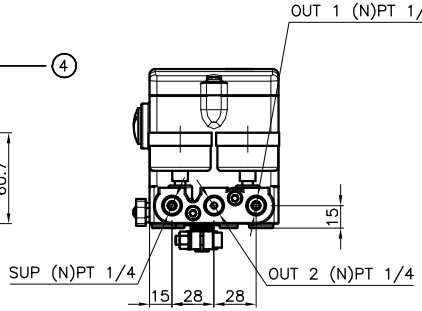

4	PRESSURE GAUGE	STS304	2
3	FEEDBACK LEVER	STS304	1
2	BASE COVER	ALDC12	1
1	BASE BODY	ALDC12	1
NO.	PART NAME	MATERIAL	Q'Ty

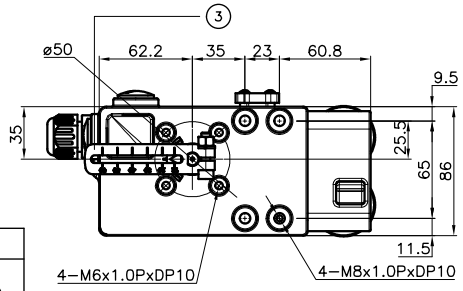

–SPECIFICATIONS

Input Signal	4 – 20 mA @ 24 VDC
Min. / Max. Current	3.6 mA / 50mA
Voltage Drop (Resistance)	Without Hart : 8.9 VDC (445Ω @ 20 mA) With Hart : 9.4 VDC (470Ω @ 20 mA)
Stroke / Angle	Linear type : 5 – 130 mm * Rotary type : 25 – 120°
Air Supply Pressure	1.4 – 7 bar (20 – 100 psi) Filtered, compressed dry and non–oiled to meet Class 3 of ISO 8573–1
Output Pressure Range	0 – 100% of supply air pressure
Air Capacity	80 ℓ/min = 4.8 Nm^3/h = 2.8 scfm (Sup = 1.4 bar) 233 ℓ/min = 14 Nm^3/h = 8.2 scfm (Sup = 6 bar)
Air Consumption	2 ℓ/min = 0.12 Nm^3/h = 0.07 scfm (Sup = 1.4 ~ 6 bar)
Characteristic	Linearity < ±0.3% F.S Sensitivity < 0.2% F.S Hysteresis < 0.2% F.S Repeatability < 0.2% F.S
Performance Characteristic	Linear, EQ % Quick open, User set (17 points)
LCD Indication	4–digit LCD indicator
Adjustable Speed	1 – 1000 (lowest 1, highest 1000)
Scan Time	2 ms
Shut–off Value	Range 0 – 10% of position signal
Valve Action	Direct action (DA) / Reverse action (RA)
Operating Temperature	– 30 ~ +80°C (–22 ~ +176 °F)**
Pneumatic Connections	PT(Rc) 1/4 or NPT 1/4
Electrical Connections	2 x PF(G) 1/2, NPT 1/2, M20 x 1.5
Protection Class	IP66, intrinsically safe (IECEx / ATEX / KC Ex ia IIC T6/T5)
Body Material	Aluminum die–cast / powder–painted
Weight	1.6 kg

PT	INPUT SIGNAL	2 WIRE
	SUPPLY VOLTAGE	12~30V DC
	OUTPUT SIGNAL	4~20mA DC
	LOAD RESISTANCE	MAX 1000Ω /30V DC
	ADJUSTMENT	AUTO CAL.
	PROTECTION	IP66
	LINEARTY	±0.5% F.S.
	HYSTEREISIS	±0.5% F.S.
	SENSITIVITY	±0.2% F.S.

	Protection Class	Feedback Lever
SS5L	□ I : Intrinsically safe (IECEx Ex ia IIC T6/T5, ATEX Ex ia IIC T6/T5) □ K : Intrinsically safe (KC Ex ia IIC T6/T5) □ W : Weatherproof to IP66	□ A : Stroke (5 ~ 30mm) □ B : Stroke (5 ~ 65mm) □ C : Stroke (5 ~ 130mm) □ D : Stroke (80 ~ 200mm)

Pressure Gauges Block	Position Feedback	Communication	Electrical Connections	Mounting Bracket	Feedback Pin Guide Lever Set
□ 0 : Not mounted □ 1 : 6 bar (90psi) □ 2 : 10 bar (150psi)	□ N : None □ O : Position transmitter (4 ~ 20mA output signal) □ L : 2 x alarm limit □ S : 2 x micro switch (SPDT) □ M : O + L □ Q : O + S	□ N : None □ H : HART	□ 3 : PT(Rc) 1/4 – PF(G)1/2 □ 4 : NPT 1/4 – NPT 1/2 □ 5 : PT(Rc) 1/4 – M20 x 1.5	□ N : None □ L : IEC 60534–6–1 (for SS5L) □ R : VDI/VDE 3845 / IEC 60534–6–2 (for SS5R)	□ 0 : Not included □ 1 : Included

POWER–GENEX
http://www.power–genex.com

	NAME	SIGNATURE		
DRAWN	Kim. D . H		PROJ : 3rd	TITLE : SS5L OUTLINE
CHECKED	Kim. K . W		SCALE : 1:1	PRODUCT NAME :
APPROVED	Kim. K . W		SIZE : A3	MODEL : SS5 L
DATE				
QUANTITY		DIMENSION : mm		DWG NO. PG–SS5–01
		SHEET 1 OF 1		REV. NO. A